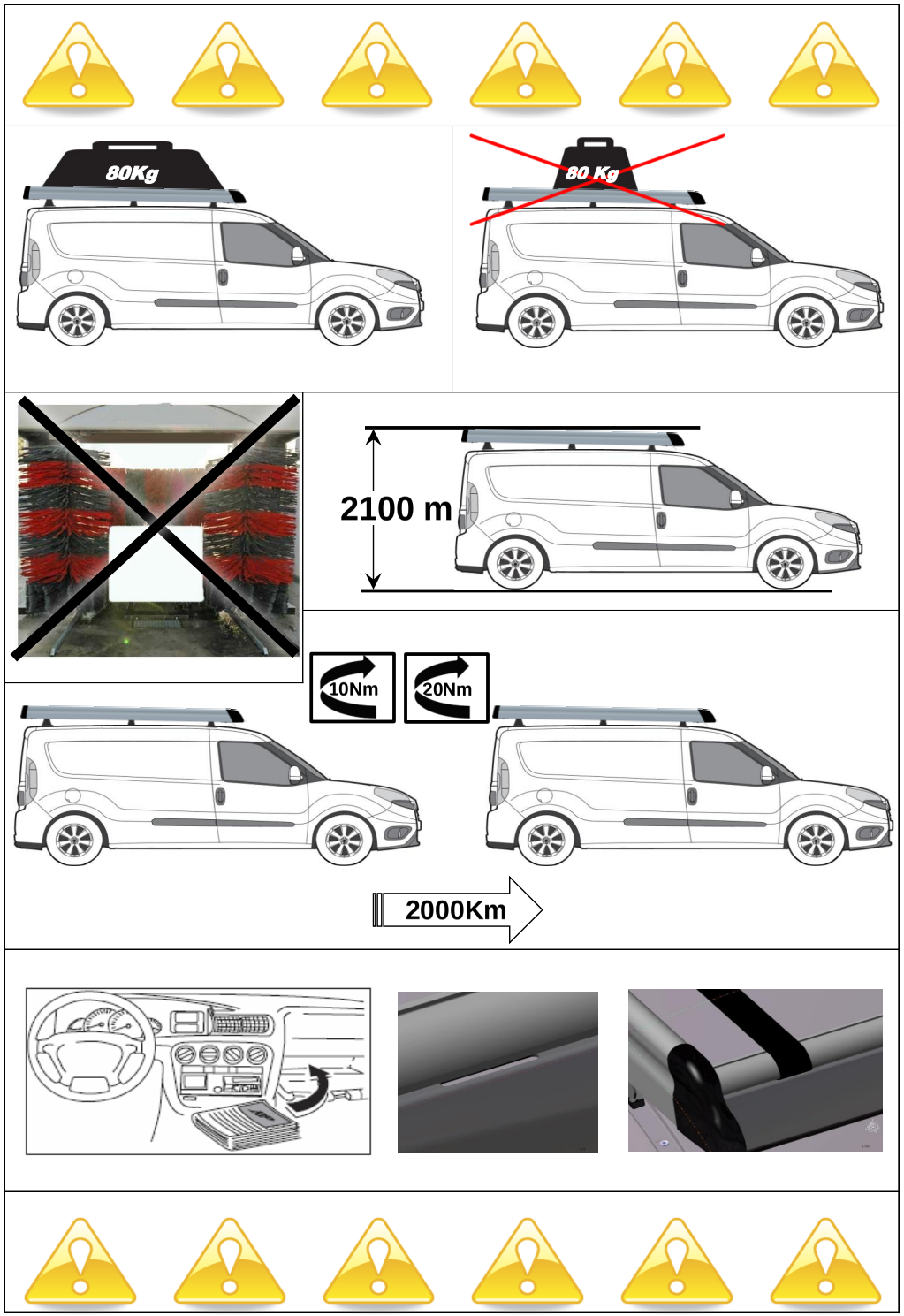

© 9778559/08-06-2018/8

Feet Kit

	Fitting instructions
	Type: 9078559
Make:	Fiat
	Doblo L2 2008->

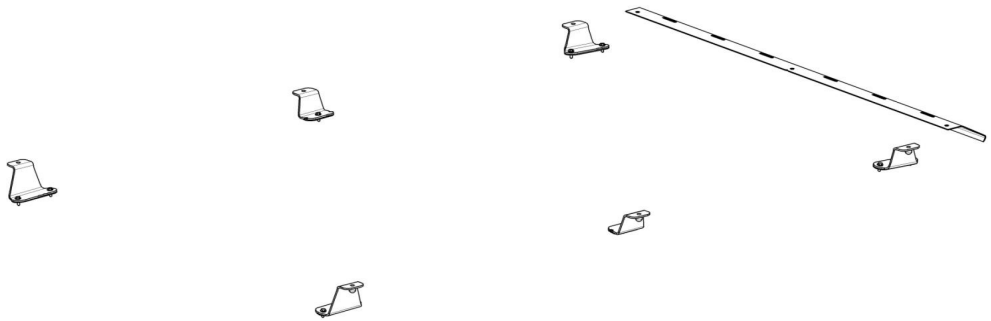

NL Montagehandleiding
GB Fitting instruction
D Montageanleitung
F Instruction de montage
S Monteringsanvisningar
DK Montagevejledning
E Instruccines de montaje
I Istrzioni per il montaggio
PL Instrukcja montażu
SF Asennusohjeet
CZ Pokyny k montáži
H Szerelési útmutató
RUS Руководство для монтажа

BRiNK

Your perfect fit
brink.eu

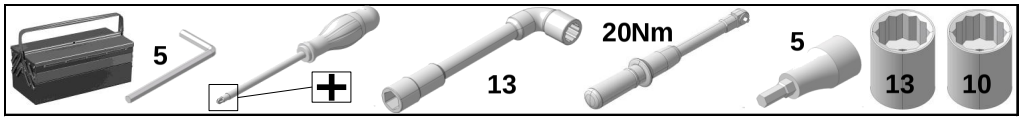
5
13
20Nm
5
13
10

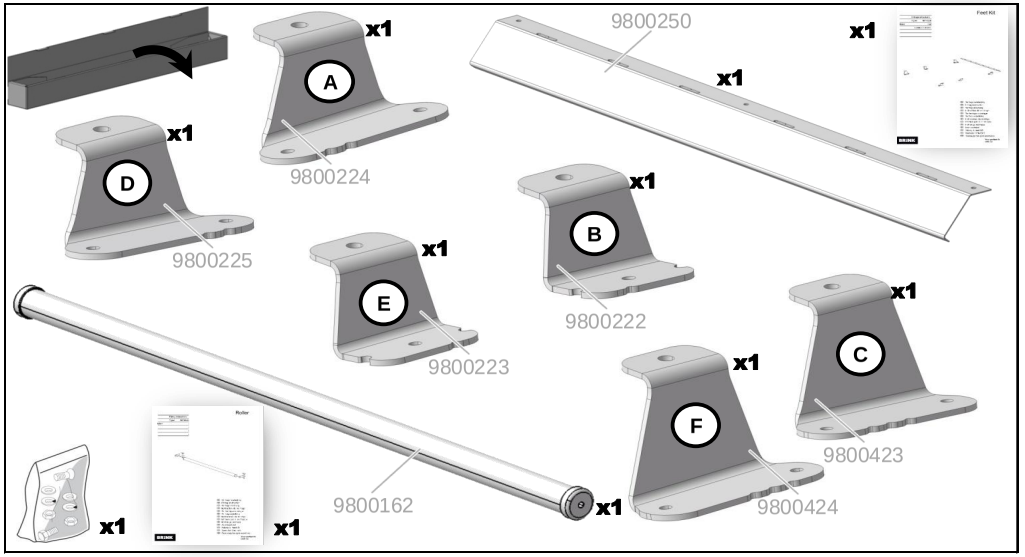
x1
A
9800224
9800250
x1
x1
x1
D
9800225
x1
B
9800222
x1
E
9800223
x1
C
9800423
x1
F
9800424
9800162
x1
x1
x1

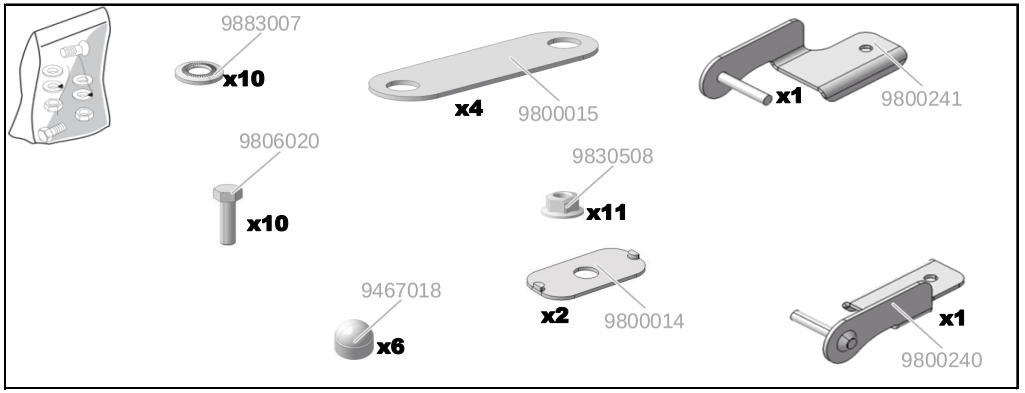
9883007
x10
x4
9800015
x1
9800241
9806020
x10
9830508
x11
9467018
x6
x2
9800014
x1
9800240

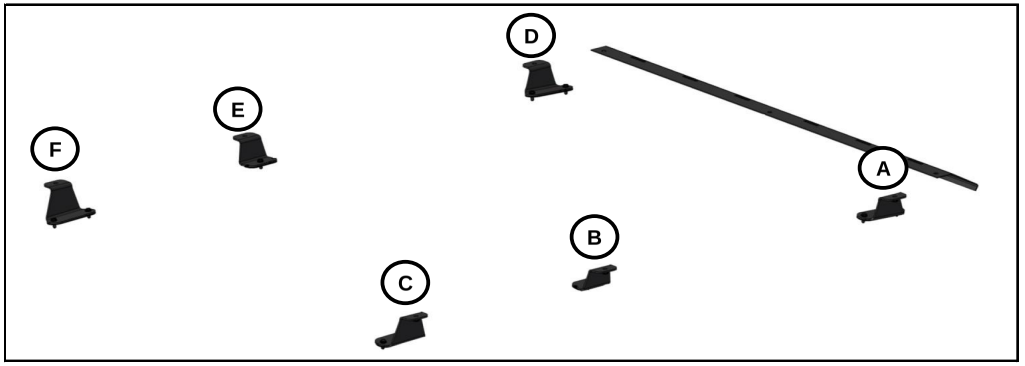
D
E
F
A
B
C

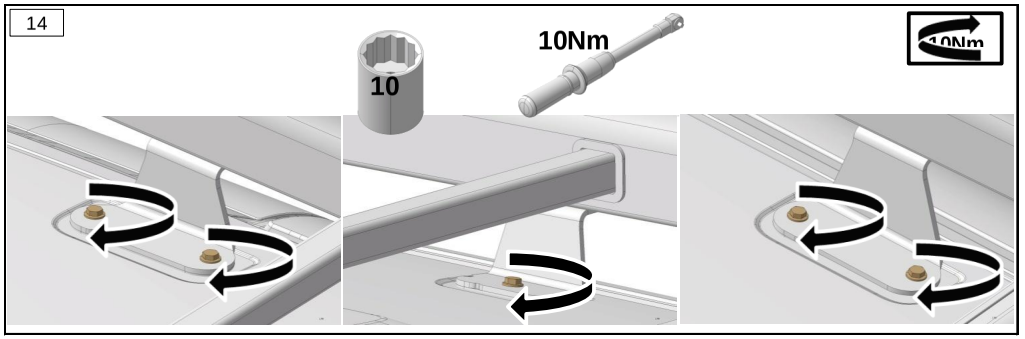
14
10
10Nm
10Nm

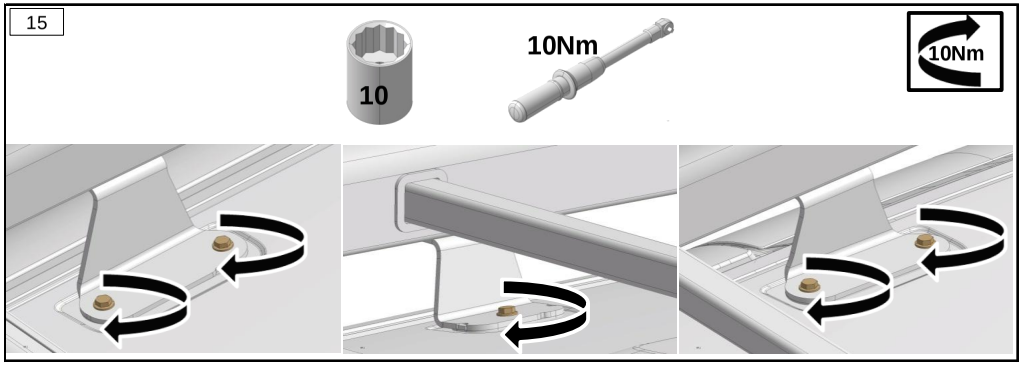
15
10
10Nm
10Nm

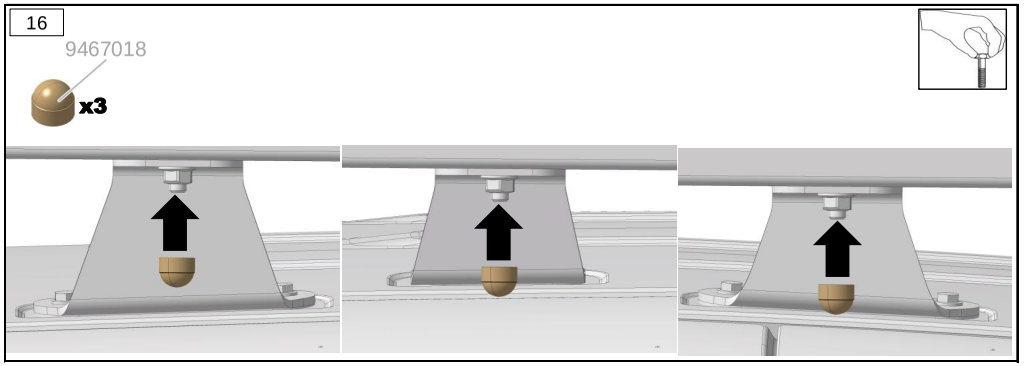
16
9467018
x3

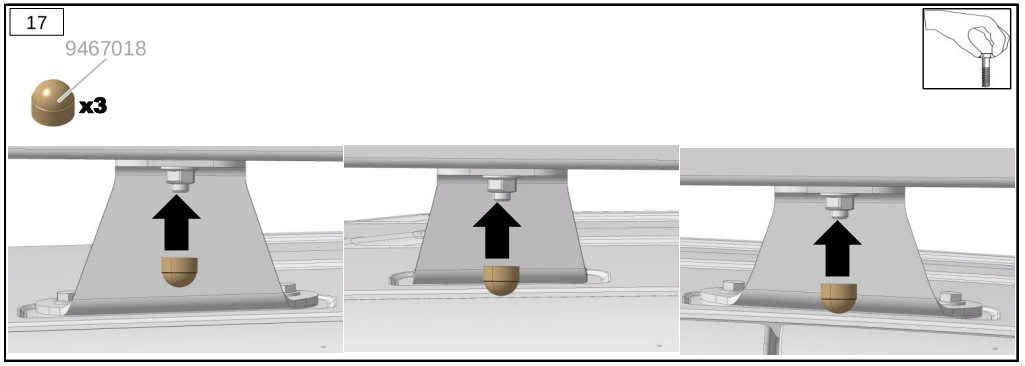
17
9467018
x3

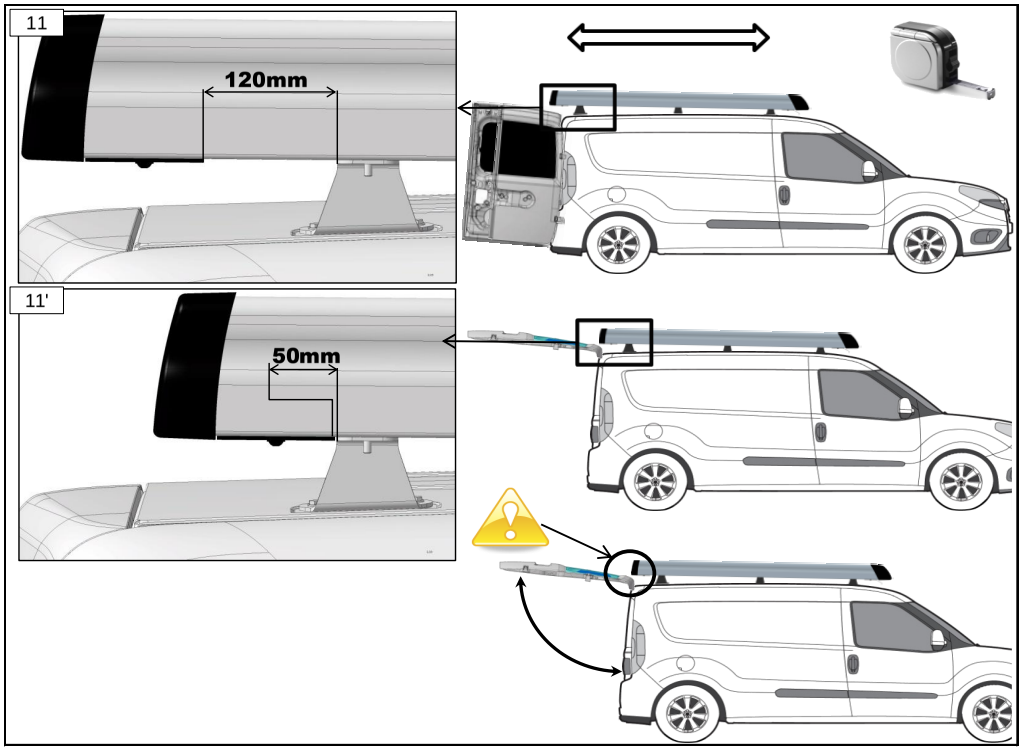
11
120mm
11'
50mm

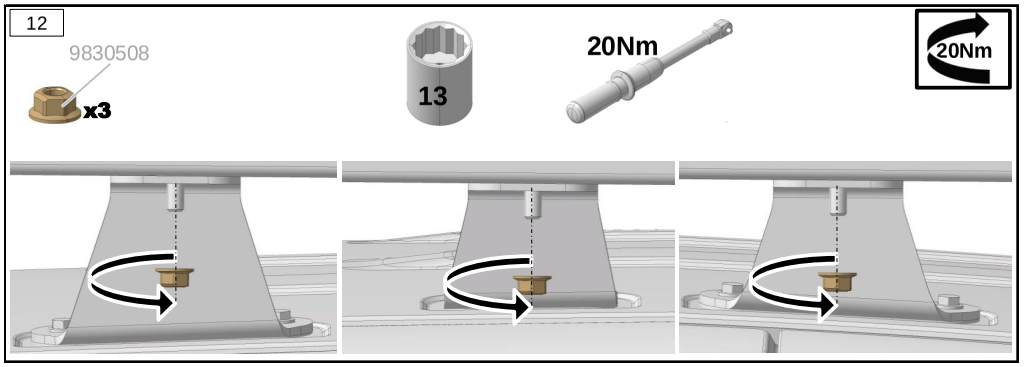
12
9830508
x3
13
20Nm
20Nm

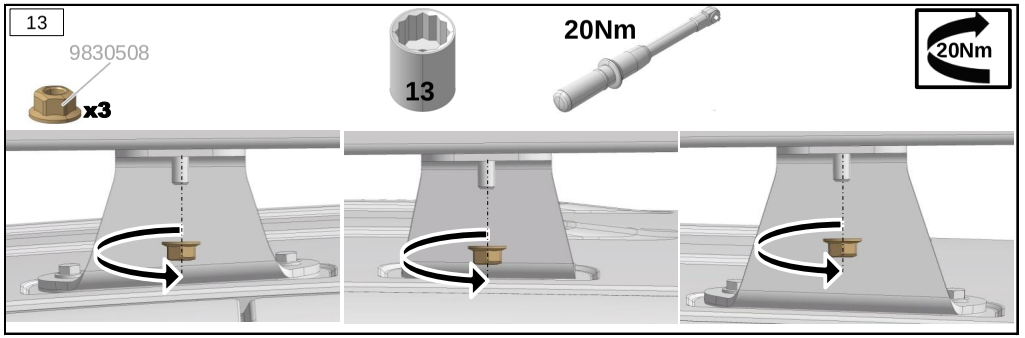
13
9830508
x3
13
20Nm
20Nm

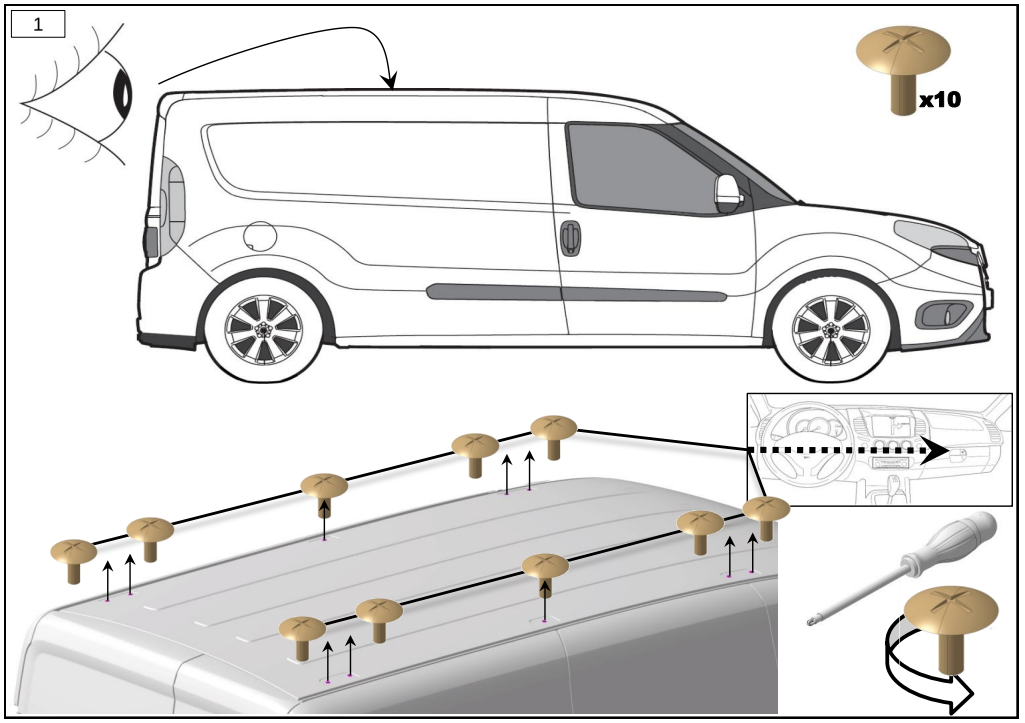
1
x10

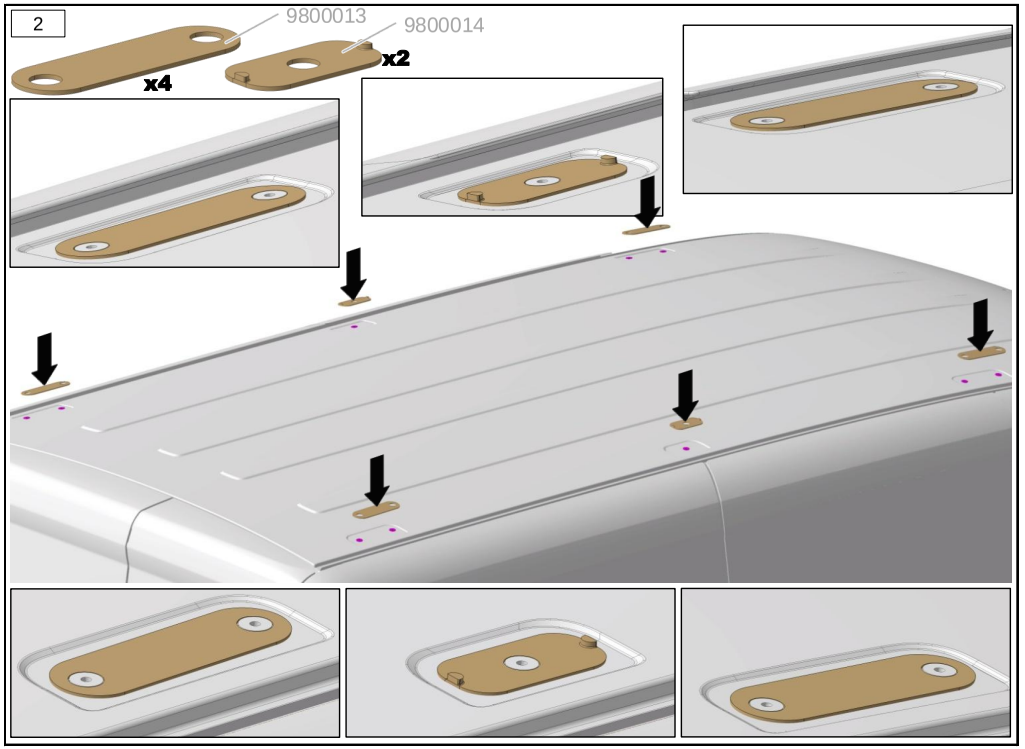
2
9800013
9800014
x4
x2

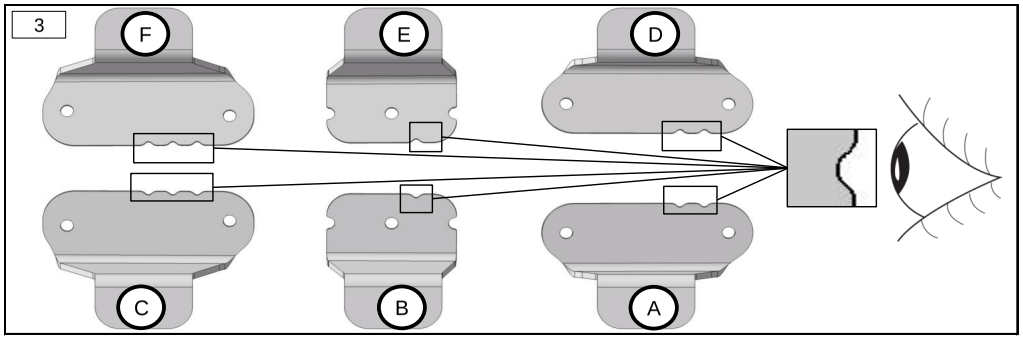
3
F
E
D
C
B
A

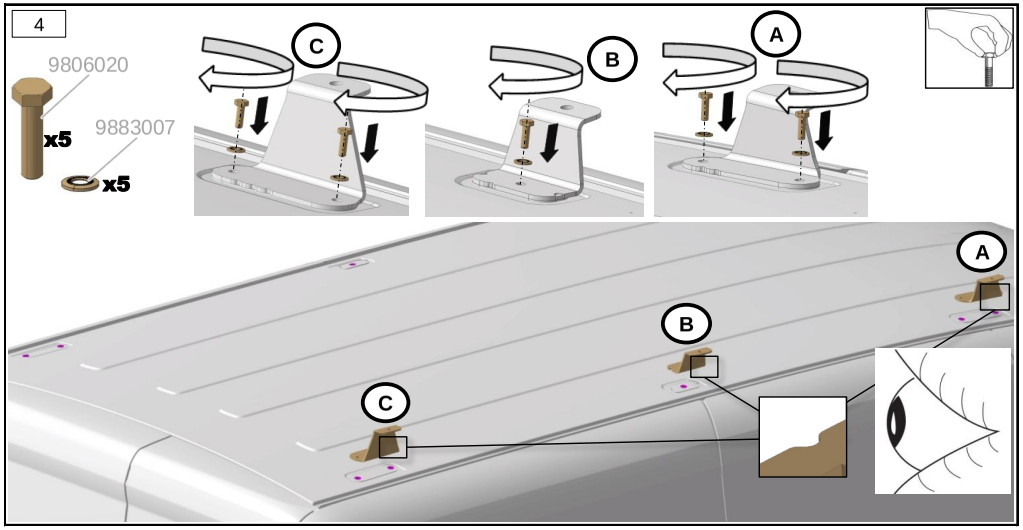
4
9806020
x5
9883007
x5
C
B
A
A
B
C

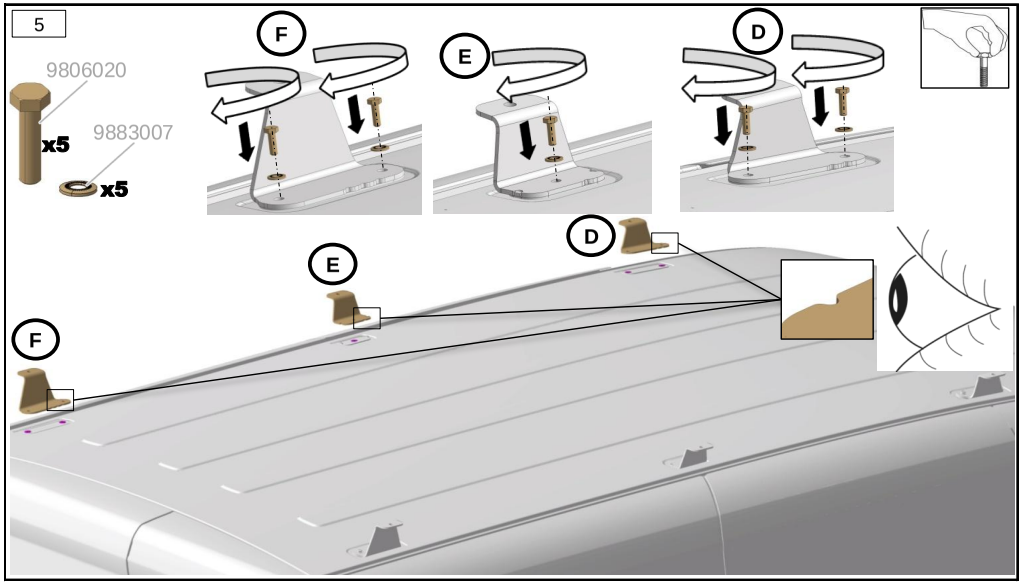
5
9806020
x5
9883007
x5
F
E
D
D
E
F

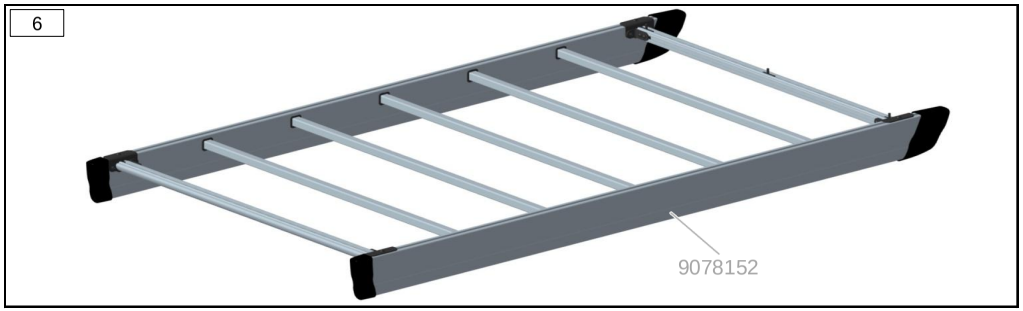
6
9078152

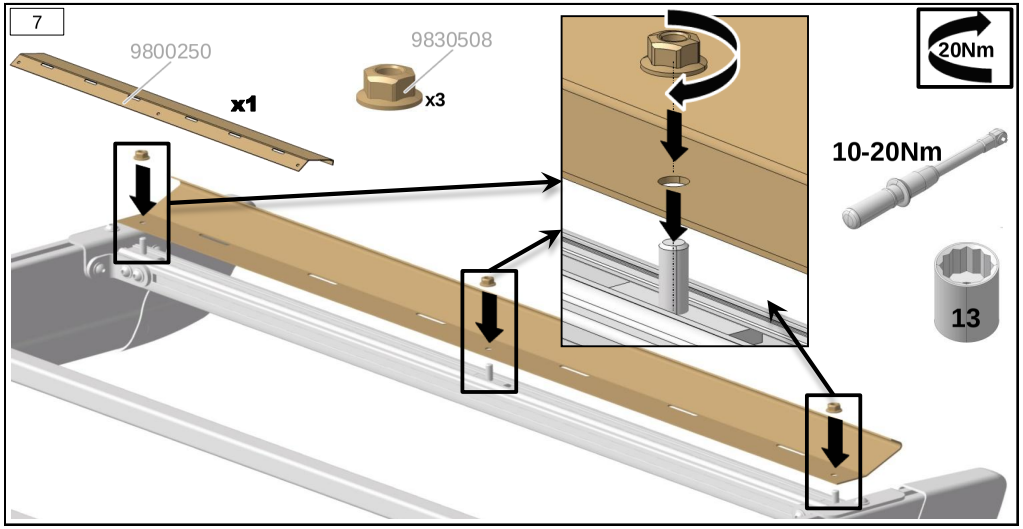
7
9800250
x1
9830508
x3
20Nm
10-20Nm
13

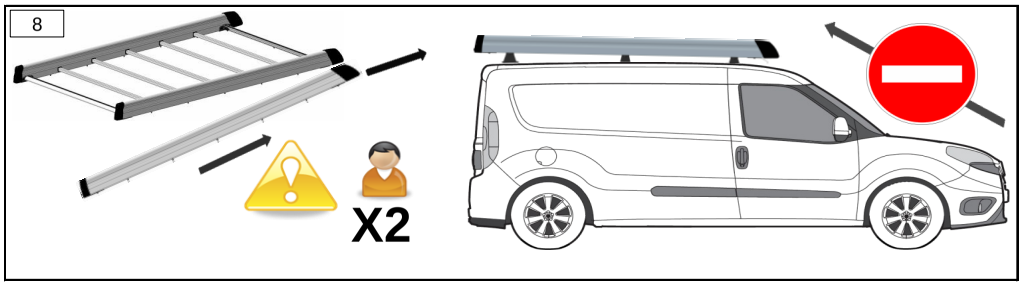
8
X2

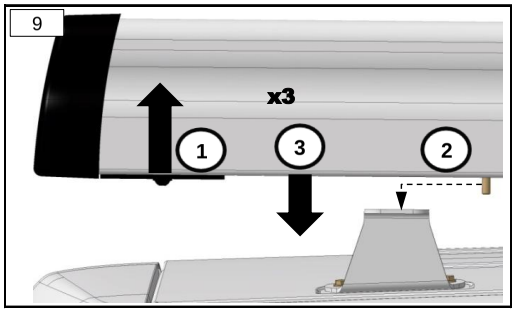
9
x3
1
3
2

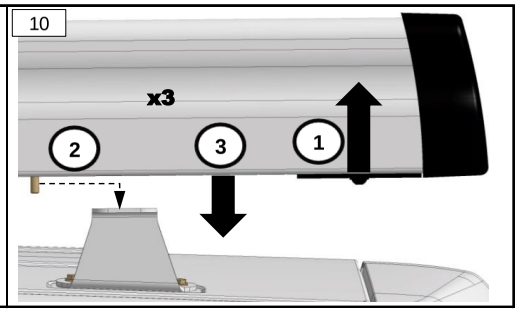
10
x3
2
3
1